CATALOG NUMBER	CONDUCTOR RANGE								DIMENSIONS			INSTALLATION TOOLING								WIRE STRIP LENGTH
	CABLE				SOLID WIRE							COLOR CODE	DIE INDEX	HYTOOL™		HYPRESS™				
	SQ.IN. AREA		CIRCULAR MILS		SQ.IN. AREA		CIRCULAR MILS							RATCHET	MECHANICAL	Y29B		Y35,Y35BH,Y39,Y39BH ◁4		
	MIN.	MAX.	MIN.	MAX.	MIN.	MAX.	MIN.	MAX.	L ± .05	O.D. ± .01	WALL ± .008					NEST	INDENTOR	NEST	INDENTOR	
YSM18 ◁10	.0002	.0013	300	1,909	.0008	.0020	1,022	2,540	.25 [6]	.12 [3]	.036 [1]	-----	-----	Y8MRB-1 Y14MRQ MR8-9Q	------	-----	-----	-----	-----	5/16"
YSM14G1 ◁9 ◁10	.0004	.0032	477	4,107	.0020	.0055	2,540	7,001	.15 [4]	.16 [4]	.035 [1]	-----	-----		◁3 ------	-----	-----	-----	-----	1/4"
YSM14 ◁10	.0004	.0032	477	4,107	.0020	.0055	2,540	7,001	.25 [6]	.16 [4]	.035 [1]	-----	-----		------	-----	-----	-----	-----	5/16"
YSM10G7 ◁9 ◁10	.0032	.0082	4,107	10,380	.0055	.0123	7,001	15,658	.34 [9]	.21 [5]	.041 [1]	-----	-----	Y8MRB-1 Y10MRQ MR8-9Q MR4CQ	------	-----	-----	-----	-----	7/16"
YSM10 ◁10	.0032	.0082	4,107	10,380	.0055	.0123	7,001	15,658	.36 [9]	.21 [5]	.041 [1]	-----	-----		◁3 ------	-----	-----	-----	-----	7/16"
YSM9CG1 ◁9	.0082	.0103	10,380	13,090	----	----	----	----	.44 [11]	.23 [6]	.039 [1]	-----	-----	Y8MRB-1 MR8-9Q MR4CQ	◁3 ------	-----	-----	-----	-----	1/2"
YSM8C ◁10	.0048	.0132	6,088	16,864	.0123	.0229	15,658	29,139	.41 [10]	.27 [7]	.045 [1]	-----	-----	MR8-9Q MR4CQ Y2MR	◁3	DV8L-1	Y29PQ	UV8L-1	Y29PQ	1/2"
YSM8CG3 ◁9	.0048	.0132	6,088	16,864	.0123	.0229	15,658	29,139	.75 [19]	.27 [7]	.045 [1]	----- RED	----- 49			DV8L-1		UV8L-1		13/16"
YSM6C ◁8	.0082	.0211	10,380	26,813	.0229	.0361	29,139	45,955	.44 [11]	.31 [8]	.044 [1]	-----	-----	MR4CQ Y2MR		DV6L		UV6L		1/2"
YSM6CG6 ◁9	.0082	.0211	10,380	26,813	.0229	.0361	29,139	45,955	.75 [19]	.31 [8]	.044 [1]	BLUE	7			DV6L		UV6L		13/16"
YSM4C ◁8	.0211	.0335	26,813	42,613	.0361	.0473	45,955	61,000	.50 [13]	.38 [10]	.046 [1]	----- GRAY	----- 8	MR4CQ Y2MR		DV4L		UV4L		9/16"
YSM2C ◁8	.0335	.0497	42,613	66,832	.0473	.0824	61,000	105,000	.62 [16]	.47 [12]	.052 [1]	BROWN	10	Y2MR		DV2L		UV2L		11/16"
YSM1C	.0497	.0632	66,832	81,807	.0824	.1075	105,000	137,000	.62 [16]	.52 [13]	.060 [2]	-----	-----	-----	MY29-11 OR MY28 1 CRIMP	DV1L		UV1L		11/16"
YSM25	.0632	.0811	81,807	104,110	.1075	.1244	137,000	157,000	.69 [18]	.57 [14]	.060 [2]	-----	-----	-----		DV25L	Y29PQ-6	UV25L	Y29PQ-6	3/4"
YSM26	.0811	.1042	104,110	133,650	.1244	.1590	157,000	197,000	.81 [21]	.64 [16]	.065 [2]	-----	-----	-----		DV26L		UV26L		7/8"
YSM27	.1042	.1304	133,650	167,332	.1590	.1963	197,000	250,000	.81 [21]	.70 [18]	.069 [2]	-----	-----	-----		DV27L		UV27L		7/8"
YSM28	.1304	.1650	167,332	211,954	.1963	.2356	250,000	300,000	.88 [22]	.78 [20]	.073 [2]	-----	-----	-----		DV28L		UV28L		15/16"

REV	DATE	DESCRIPTION	ECO	BY	C'H'K.
E	03/12/2013	REDRAW YSM SALES DRAWING & COMBINE SHEETS. CHANGE DWG. FORMAT, "FCI" IS SHOWN IN UPPER PORTION OF TITLE BLOCK, REMOVE IT.	30841	GP	MB

TABLE 2

CATALOG NUMBER	CONDUCTOR RANGE STRANDED COPPER WIRE QUANTITY	SIZE	DIMENSIONS L ± .05	O.D. ± .01	WALL ± .008	HYTOOL TM	TOOL SETTING	WIRE STRIP LENGTH
YSM2C	5	#10 AWG	.62 [16]	.46 [12]	.052 [1]	MY-28	COPPER AIRCRAFT CABLE #4 - #2 (1 CRIMP)	11/16"
	6							
	7	#12 AWG						
	8							
	9							
	10							
YSM4C	3	#10 AWG	.50 [13]	.38 [10]	.046 [1]			9/16"
	4							
	4	#12 AWG						
	5							
	6							
YSM6C	2	#12 AWG	.44 [11]	.31 [8]	.044 [1]		COPPER AIRCRAFT CABLE #8 - #6 (1 CRIMP)	1/2"
	3							
	4							
	3	#14 AWG						
	4							
	5							
	6							

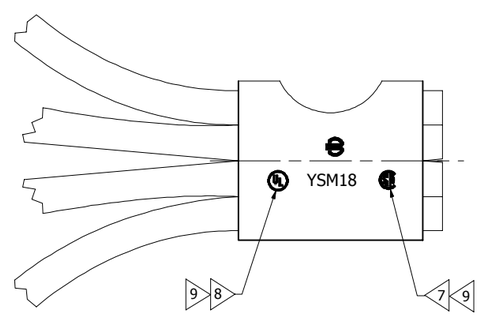

LAP SPLICE
(TYPICAL INSTALLATION)

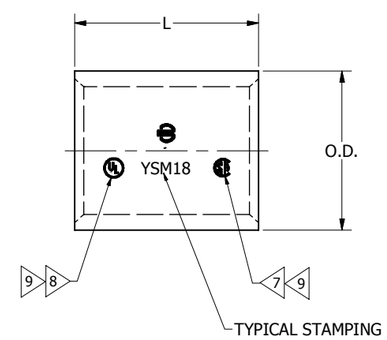

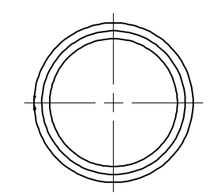

NOTES:

1. MATERIAL: COPPER PER ASTM B75.
2. FINISH: TIN PLATED. FOR NICKEL PLATING AT MINIMUM 200 MICRO INCHES THICK, ADD SUFFIX "NK" TO THE CAT. NO.
3. ▷3 MR8-9Q CAN BE USED IF STOP PLATE IS REMOVED.
4. ▷4 INDENTORS USED WITH THE Y35 AND Y35BH HYPRESS™ TOOLS ARE HELD WITH THE Y35P ADAPTOR.
5. FOR ADDITIONAL INSTALLATION TOOLING REFER TO FACTORY.
6. DIMENSIONS IN BRACKETS [ ] ARE IN MILLIMETERS ROUNDED OFF TO THE NEAREST MILLIMETER, UNLESS OTHERWISE NOTED, AND ARE FOR REFERENCE ONLY.
7. ▷7 ALL STANDARD CATALOG NUMBERS ARE CSA APPROVED (SEE TABLE 1 FOR EXCEPTIONS).
8. ▷8 YSM6C, YSM4C AND YSM2C ARE UL LISTED SEE TABLE 2 FOR TOOLING AND LISTED COMBINATIONS.
9. ▷9 THESE CONNECTORS (SEE TABLE 1) ARE NOT UL OR CSA APPROVED.
10. ▷10 BURNDY® TEST DATA DOES NOT EXIST FOR THIS COMBINATION OF CRIMP TOOL AND CONNECTOR.

TO ORDER BURNDY® PRODUCTS CALL

UNITED STATES
1-800-346-4175 (LONDONDERRY, NH)

CANADA:
1-800-361-6975 (QUEBEC)
1-800-387-6487 (ALL OTHER PROVINCES)

FOR PRODUCT INFO: http://www.burndy.com

PARALLEL HYLINK™

ITEM NO: N/A

CAT. NO: YSM- (TABLE)

DRAWN BY:	H.E.B.	10/09/1958
CHECKER:	C.R.S.	10/10/1958
DSN APRVL:	K. WOO	04/25/1996
MFG APRVL:	--	--
QA APRVL:	J. BRODEUR	04/25/1996
MKT APRVL:	G. SCHWEBLER	04/29/1996
PROD FAM:	--	
PROJECT #:	--	
DOCUMENT TYPE:	SALES	
REL LEVEL:	Released	

BURNDY®

SIZE: D

DRAWING NO: SC041139

REV: E

SHEET 1 OF 2

CATALOG NUMBER	CONDUCTOR RANGES IN CIRCULAR MILS ◁7		DIMENSIONS			INSTALLATION TOOLING (# OF CRIMPS)			WIRE STRIP LENGTH
							HYDRAULIC TOOLS		
	MIN.	MAX.	L ± .05	O.D. ± .01	WALL ± .008	DIE TYPE	Y35, Y39, Y750 PAT35, PAT750 ◁4	Y46 ◁3 ◁4	
YSM29-2	211,500	275,000	1.38 [35]	.75 [19]	.077 [2]	NEST	U29D1 (1)	U29D1 (1)	1-7/16"
						INDENTOR	Y34PR11	Y34PR11	
YSM30-2	250,000	330,000	1.38 [35]	.81 [21]	.081 [2]	NEST	U30D1 (1)	U30D1 (1)	1-7/16"
						INDENTOR	Y34PR11	Y34PR11	
YSM31-2	270,000	385,000	1.50 [38]	.88 [22]	.087 [2]	NEST	U31D1 (1)	U31D1 (1)	1-9/16"
						INDENTOR	Y34PR11	Y34PR11	
YSM32-2	290,000	440,000	1.50 [38]	.95 [24]	.095 [2]	NEST	U32D1 (1)	U32D1 (1)	1-9/16"
						INDENTOR	Y34PR11	Y34PR11	
YSM33-2	350,000	495,000	1.50 [38]	1.01 [26]	.104 [3]	NEST	U33D1 (1)	U33D1 (1)	1-9/16"
						INDENTOR	Y34PR11	Y34PR11	
YSM34-2	400,000	550,000	1.62 [41]	1.06 [27]	.113 [3]	NEST	U34D1 (1)	U34D1 (1)	1-11/16"
						INDENTOR	Y34PR11	Y34PR11	
YSM35-2	440,000	605,000	1.62 [41]	1.12 [28]	.125 [3]	NEST	U35D1 (1)	U35D1 (1)	1-11/16"
						INDENTOR	Y34PR11	Y34PR11	
YSM36-2	480,000	660,000	1.62 [41]	1.19 [30]	.132 [3]	NEST	-----	P36D (1)	1-11/16"
						INDENTOR	-----	P48PR2	
YSM38-2	600,000	770,000	1.88 [48]	1.25 [32]	.133 [3]	NEST	-----	P38D (1)	1-15/16"
						INDENTOR	-----	P48PR2	
YSM40-2	675,000	880,000	1.88 [48]	1.35 [34]	.149 [4]	NEST	-----	P40D (1)	1-15/16"
						INDENTOR	-----	P48PR2	
YSM41-2	800,000	935,000	1.88 [48]	1.38 [35]	.153 [4]	NEST	-----	P41D (1)	1-15/16"
						INDENTOR	-----	P48PR2	
YSM44-2	800,000	1,100,000	1.88 [48]	1.49 [38]	.164 [4]	NEST	-----	P44D (1)	1-15/16"
						INDENTOR	-----	P48PR2	

REV	DATE	DESCRIPTION	ECO	BY	C'H'K.
E	03/12/2013	REDRAW YSM SALES DRAWING & COMBINE SHEETS. CHANGE DWG. FORMAT, "FCI" IS SHOWN IN UPPER PORTION OF TITLE BLOCK, REMOVE IT.	30841	GP	MB

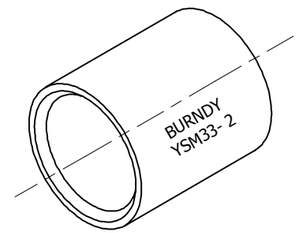

ISOMETRIC VIEW

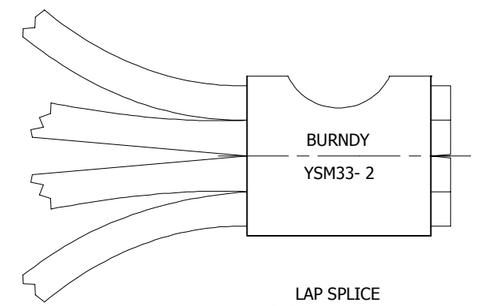

LAP SPLICE
(TYPICAL INSTALLATION)

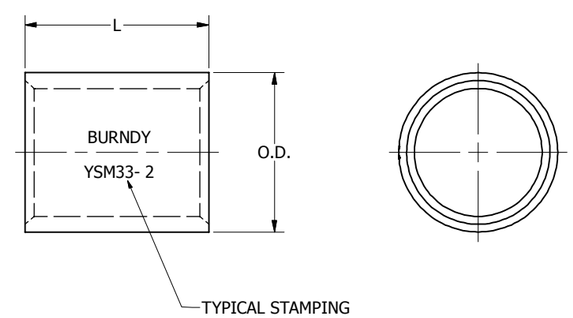

NOTES:

1. MATERIAL: COPPER.
2. FINISH: TIN PLATED.
3. ▷3▷ CATALOG NUMBER PUADP-1 ADAPTOR IS REQUIRED TO USE "U" DIES IN Y46 HYPRESS™ .
4. ▷4▷ CATALOG NUMBER Y35P3 ADAPTOR DIE IS REQUIRED FOR Y34PR11 INDENTOR.
5. FOR ADDITIONAL INSTALLATION TOOLING REFER TO FACTORY.
6. DIMENSIONS IN BRACKETS [ ] ARE IN MILLIMETERS ROUNDED OFF TO THE NEAREST MILLIMETER, UNLESS OTHERWISE NOTED, AND ARE FOR REFERENCE ONLY.
7. ▷7▷ MIXED CONDUCTOR RANGE ACCOMMODATED BY CONNECTOR BARRELS. THESE REPRESENT TOTALS FOR PARALLEL HYLINKS™.
8. WHEN INSTALLING MIXED CONDUCTOR COMBINATIONS, IDENT INTO STRANDED CABLES WHILE LOCATING MAGNET WIRES IN NEST DIE AREA.
9. SPLICING OF MIXED COMBINATIONS OF COPPER MAGNET WIRE AND COPPER STRANDED CABLES.

SUGGESTED METHOD OF SELECTING CONNECTOR AND INSTALLATION TOOLING:

DETERMINE CROSS SECTION (CIRCULAR MIL AREA) OF CONDUCTORS. COMPARE TOTAL AREA WITH THE MIN-MAX RANGES AS SHOWN IN TABLE. SELECT CONNECTOR WHICH ACCEPTS THE CONDUCTORS WITH OPTIMUM SNUG FIT. IF THERE IS AN EXCESS OF VOIDS AROUND THE MAGNET WIRES THEY SHOULD BE PRE-SHAPED FOR FIT INTO A SMALLER CONNECTOR. AN ALTERNATE METHOD OF REDUCING VOIDS BETWEEN COPPER STRAPS IS BY ADDING COPPER FILLERS. USE NEST AND INDENTOR DIES WITH ASSOCIATED CONNECTORS AS OUTLINED IN TABLE. TRIAL INSTALLATIONS SHOULD BE CROSS SECTIONED THROUGH DEEPEST PORTION OF INDENT AND SHOULD REVEAL A MINIMUM OF VOIDS BETWEEN CONDUCTORS. CONTACT BURNDY® IF A CONNECTOR RECOMMENDATION CANNOT BE RESOLVED.

SUPERSEDES: SD56814

TO ORDER BURNDY® PRODUCTS CALL

UNITED STATES
1-800-346-4175 (LONDONDERRY, NH)

CANADA:
1-800-361-6975 (QUEBEC)
1-800-387-6487 (ALL OTHER PROVINCES)

FOR PRODUCT INFO: http://www.burndy.com

PARALLEL HYLINK™

ITEM NO: N/A

CAT. NO: YSM--- 2 (TABLE)

DRAWN BY:	J. WALTERS	09/30/1997
CHECKER:	--	--
DSN APRVL:	K. WOO	03/25/1997
MFG APRVL:	--	--
QA APRVL:	J. BRODEUR	09/23/1997
MKT APRVL:	G. SCHWEBLER	09/23/1997
PROD FAM:	--	
PROJECT #:	--	
DOCUMENT TYPE:	SALES	
REL LEVEL:	Released	

BURNDY®

SIZE	DRAWING NO	REV
D	SC041139	E
	SHEET 2 OF 2	